1 -Comp. Loc.: Airbag

- ⇒ “1.1 Airbag Components ”, page 1
- ⇒ “1.2 Side Crash Sensors ”, page 2
- ⇒ “1.3 Seat Belts Tensioner ”, page 3
-

1.1 Airbag Components

Protected by copyright. Copying for private or commercial purposes, in part or in whole, is not permitted unless authorised by Volkswagen AG. Volkswagen AG does not guarantee or accept any liability with respect to the correctness of information in this document. Copyright by Volkswagen AG.

1 - Driver airbag igniter -N95-

2 - Airbag indicator lamp -K75-

3 - Front passenger airbag igniter 1 -N131-

4 - Front passenger side airbag igniter -N200-

5 - Driver head curtain airbag igniter -N251-
- ❑ Wagon

5 - Front passenger head curtain airbag igniter -N252-
- ❑ Wagon

6 - Driver head curtain airbag igniter -N251-
- ❑ Sedan

6 - Front passenger head curtain airbag igniter -N252-
- ❑ Sedan

7 - Front passenger side airbag crash sensor -G180- ⇒ page 2

8 - Data bus on board diagnostic interface -J533-

9 - Driver side airbag crash sensor -G179- ⇒ page 2

10 - Driver side airbag igniter -N199-

11 - Airbag control module -J234-

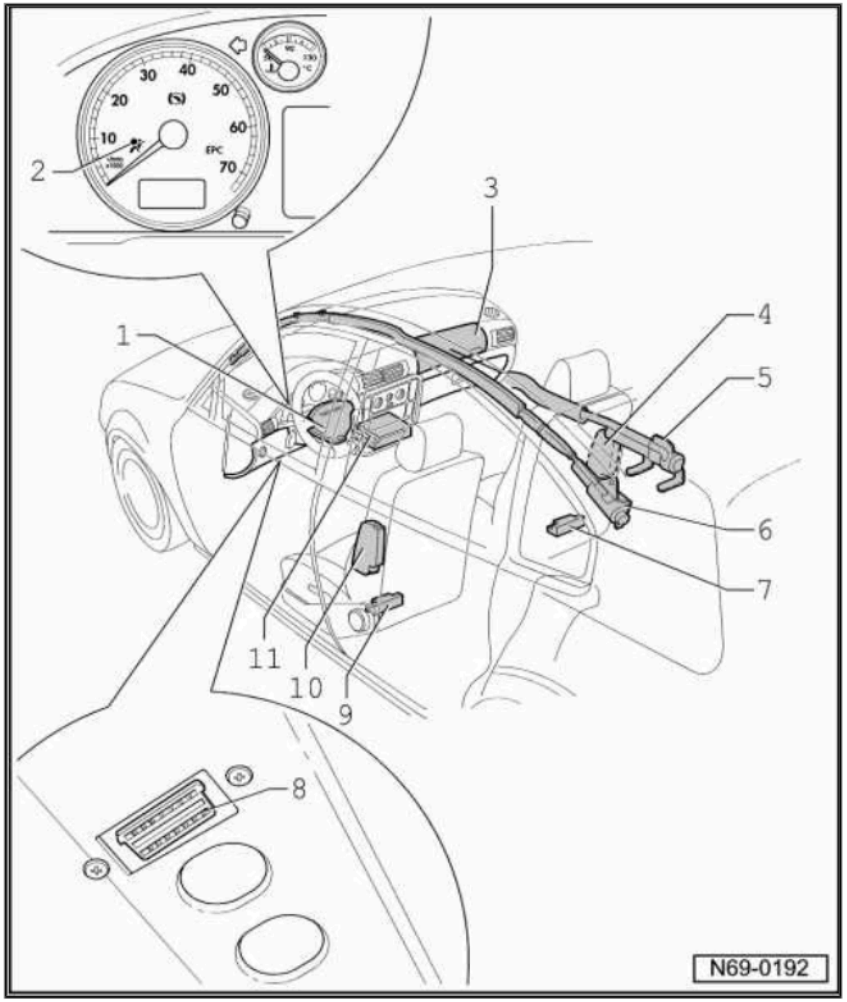

1.2 Side Crash Sensors

Protected by copyright. Copying for private or commercial purposes, in part or in whole is not permitted unless authorised by Volkswagen AG. Volkswagen AG does not guarantee or accept any liability with respect to the correctness of information in this document. Copyright by Volkswagen AG.

1 - Driver side airbag crash sensor -G179-

1 - Front passenger side airbag crash sensor -G180-

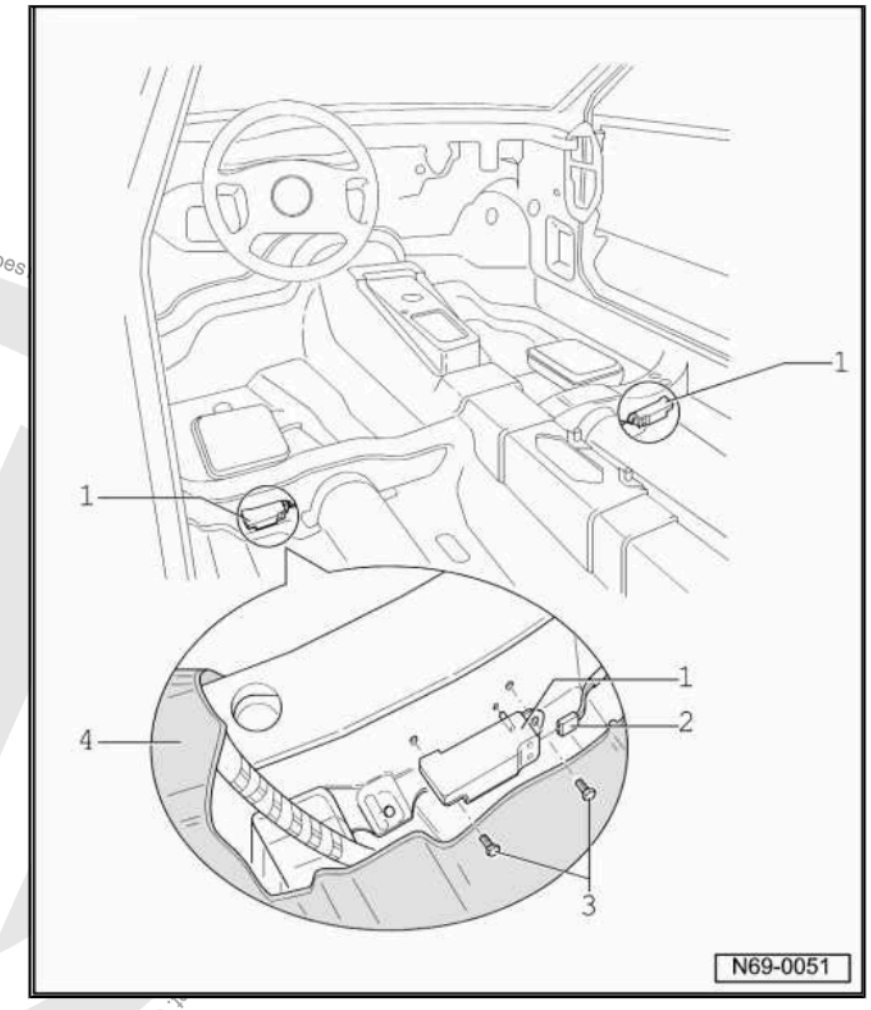

Protected by copyright. Copying for private or commercial purposes, in part or in whole, is not permitted unless authorised by Volkswagen AG. Volkswagen AG does ... Copyright by Volkswagen AG.

1.3 Seat Belts Tensioner

- ⇒ “1.3.1 Front Seat Belts Tensioner”, page 4
- ⇒ “1.3.2 Rear Seat Belts Tensioner ”, page 5

1.3.1 Front Seat Belts Tensioner

5 - Left front seat belt microswitch -F140-

5 - Right front seat belt microswitch -F141-

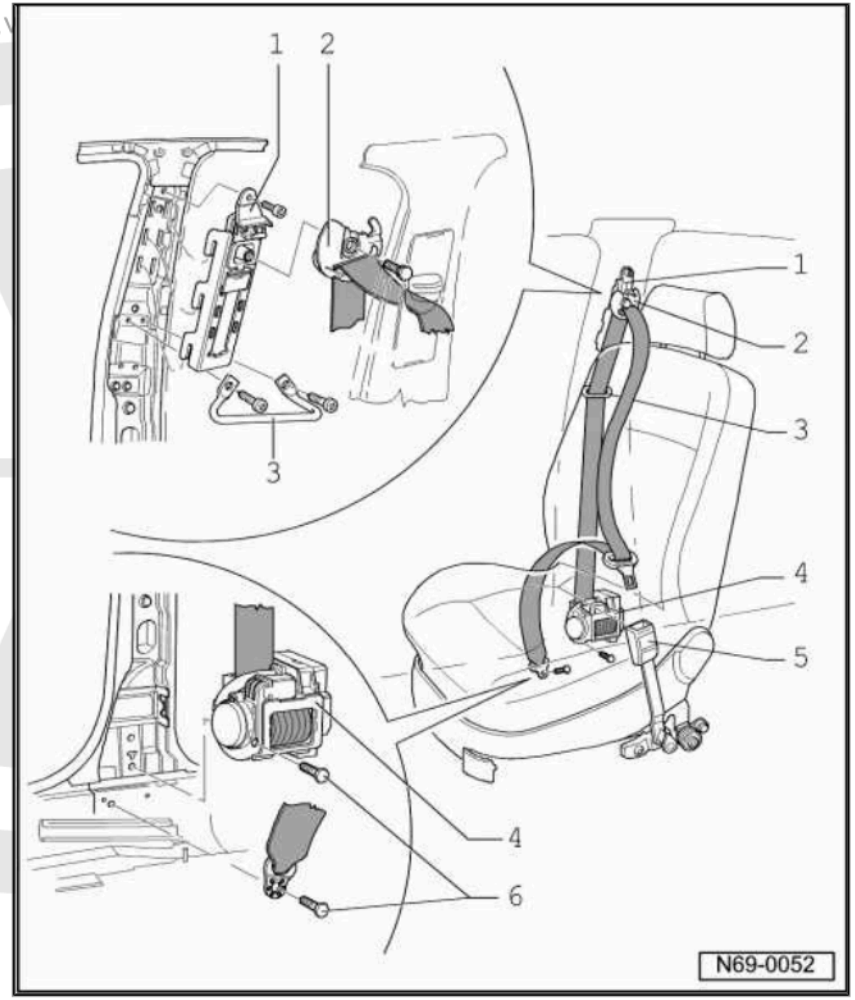

Protected by copyright. Copying for private or commercial purposes, in part or in whole, is not permitted unless authorised by Volkswagen AG.

1.3.2 Rear Seat Belts Tensioner

Note

Refer to the R&I section of the service manual for more descriptive locations and access to components

ing for private or commercial purposes, in part or in whole, is not permitted unless authorised by Volkswagen AG. Volkswagen AG does not guarantee or a

1 - Seat Belt with Belt Tensioner
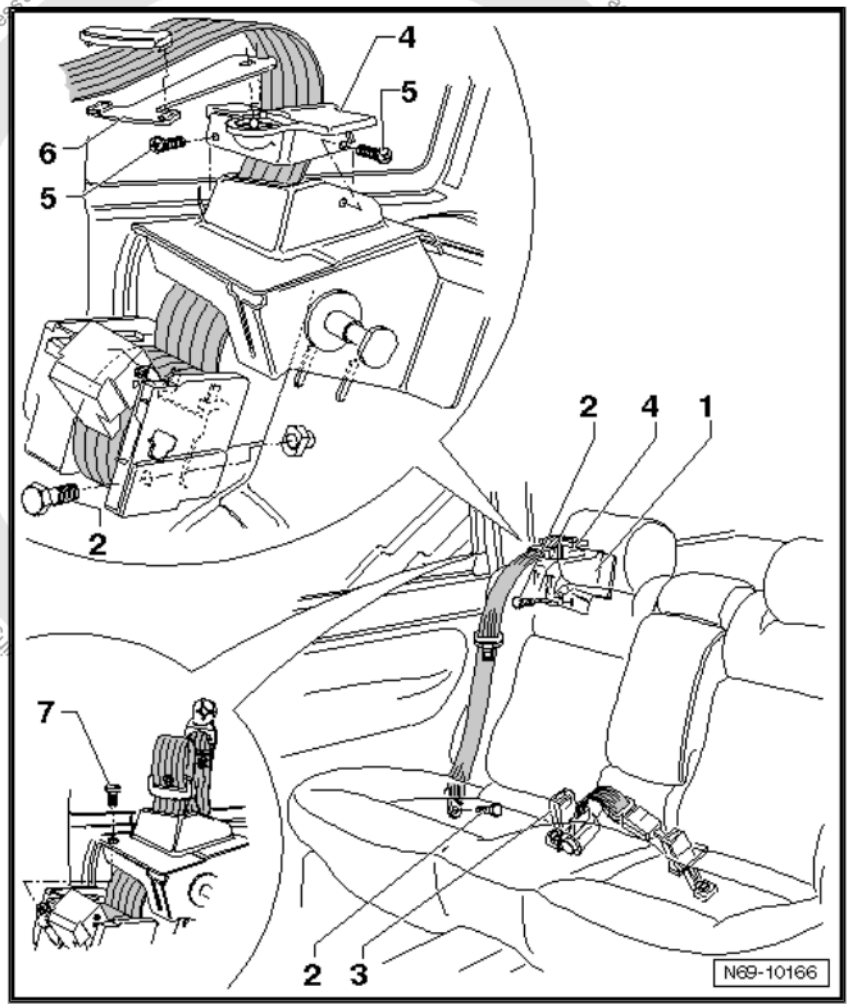
3 - Belt Buckle